Operating Instructions

PROFESSIONAL SOUND SYSTEM

TOA

Speaker System

Model SF-60

GENERAL DESCRIPTION

The TOA SF-60 is a 3-way speaker system, a bass reflex enclosure to be driven by 2-way multi-amplifier (bi-amplifier), designed as permanent installation for professional applications in high-level sound reinforcement environments where high-efficiency and faithful reproduction are required such as discos and in live sound reinforcement applications.

The SF-60 reproduces transcient response characteristics in the low frequency range using a larger magnet than used for the 30cm (12") woofer assembled in the SF-30 speaker system.

The driver unit for the SF-60 is used the HFD-651 high power driver unit improved for the system, and LE Series Constant directivity (CD) horn ensures a uniform sound dispersion pattern (90° horizontal by 40° vertical).

The 2-way multi-amplifier driving system is adopted allowing each speaker unit to provide maximum performance, and further the SF-60 is built in the passive circuit to correct time, phase and frequency response for obtaining the best frequency response when the multi-amplifier is employed.

The passive type crossover between the driver and the tweeter is adopted and its crossover frequency is set to higher 10kHz. A high-tech crossover network of —18dB/octave slope at the tweeter is designed enabling to endure high power input.

The tweeter level can be set with the High frequency level control.

The fixing holes for easy ceiling suspension are provided on top, bottom and both sides of an enclosure, and four corners inside the enclosure are highly reinforced with L type metals with W3/8" nuts.

The baffle fixed the horn and the tweeter can be turned to either left-hand or right-hand direction to provide wide directivity to the horizontal direction where the SF-60 is installed at either left-hand or right-hand direction.

Recessed type earring handles are provided on both sides of the enclosure for installation or transportation, and the enclosure is finished in gray, shock-resistant polyester painting.

FEATURES

1. 3-way vented system driven by 2-way multi-amplifier (bi-amplifier).
2. High power capacity of 120 watts continuous pink noise for low frequency and 80 watts for Mid/High frequency.
3. 30cm (12") woofer using a larger magnet.
4. HFD-651 type high power driver with LE Series Constant directivity (CD) horn (90° horizontal 40° vertical).
5. Exponential horn tweeter.
6. Built in the passive circuit to correct time, phase and frequency response for multi-amplifier driving.
7. Passive crossover between the driver and the tweeter set to higher 10kHz.
8. High frequency level control for the tweeter.
9. Fixing nuts for ceiling suspension provided on top, bottom and both sides of the enclosure.
10. The baffle fixed the horn and the tweeter can be turned.
11. Recessed type carrying handles provided on both sides of the enclosure.
12. Removable punched metal front grill.

Input Panel

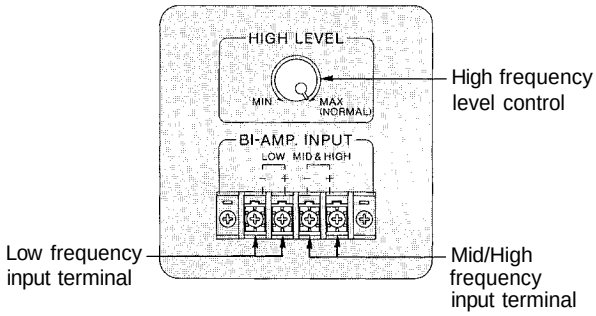

- Input terminal of the SF-60 is divided into Low and Mid/High frequencies as the SF-60 is a 2-way multi-amplifier driving system.
  Ensure to connect polarities (+, –) of each amplifier output cords to the speaker terminals rightly.
- Make the level setting according to the environmental conditions, although almost flat frequency response is obtainable as long as the High frequency level control is set to the NORMAL.

Connection Diagrams

1. SF-60 single system (2-way multi-amplifier driving system)

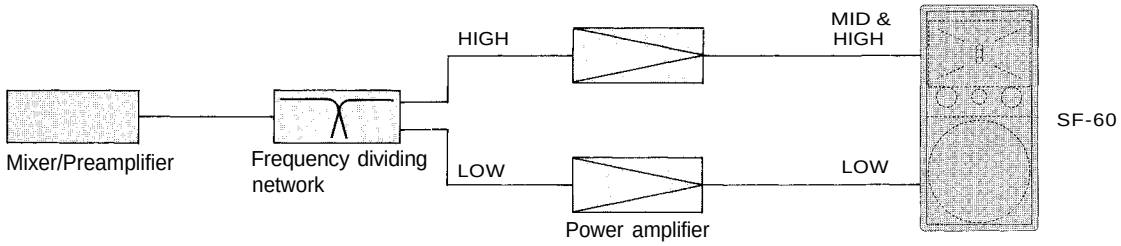

2. Combination system with the super-woofer (3-way multi-amplifier driving system)

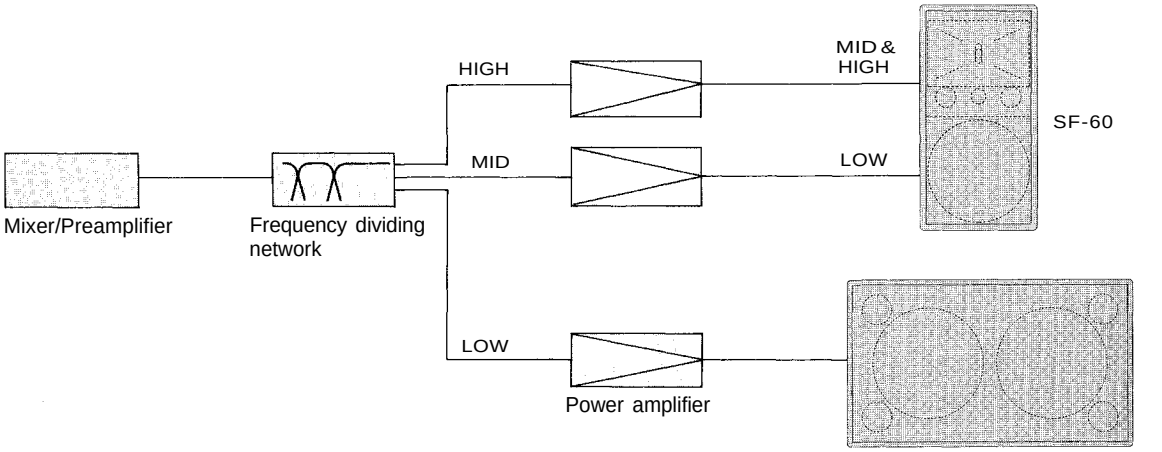

Frequency Dividing Network

Set each mode of the frequency dividing network as per the following tables. Best frequency response ensures as time and phase are corrected with the built-in passive circuit.

1. SF-60 single system (2-way multi-amplifier driving system)

	LOW	HIGH
Level	0dB	–5dB*1
Phase	Normal	Normal
Crossover frequency	1kHz	
Slope	–12dB/octave (Butterworth)	

※1 -5dB stands for a standard value when connected the same amplifiers for LOW and HIGH frequencies. Make the level setting according to the environmental conditions at installation.

2. Combination system with the super-woofer (3-way multi-amplifier driving system)

	LOW	MID	HIGH
Level	depending on the system	0dB	–5dB
Phase	Reverse*2	Normal	Normal
Crossover frequency	80~125Hz*2	1kHz	
Slope	–12dB/octave*2	–12dB/octave	

※2 The crossover between LOW and MID frequency range stands for typical one.
When Slope characteristics is changed, best characteristics is obtainable by changing phase of LOW frequency range into normal. Finally decide the change at the time of measurement or test listening.

Installation

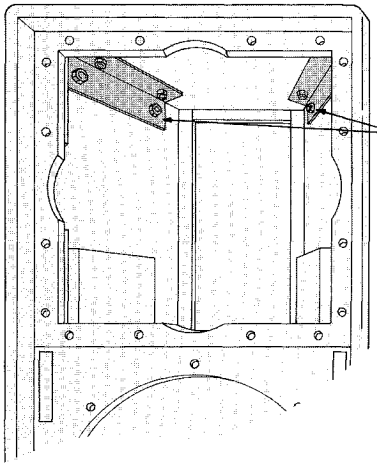

L type metals with W3/8" nuts are provided at four corners inside the enclosure as shown in the figure. Nuts are located just at back side of the fixing holes of the enclosure. Utilize these fixing holes according to installation places of the speaker. Refer to appearance diagram on the fixing holes.

Caution

The weight of SF-60 is approximately 39kg (86 lb.). When suspending this speaker to the ceiling, make sure to install it after investigating structure of installation places, and confirming that the suspending wires and hardware are heavy-duty to this speaker.
Secure to tighten eyebolts etc. to fix the speaker.
TOA takes no responsibility for any accidents or injuries resulting from the falling of the SF-60 due to incorrect installation.

Speaker Installation Turning to Either Left-Hand or Right-Hand Direction

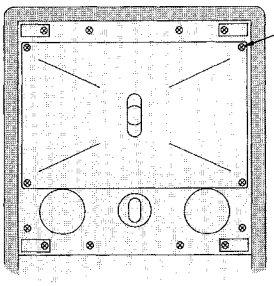

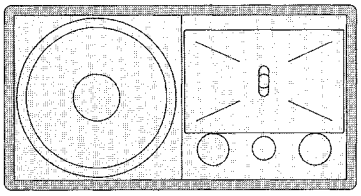

Turning the speaker to right-hand direction.
(Turning it to left-hand direction is also acceptable)

If the SF-60 is turned to either left-hand or right-hand direction according to environmental conditions, remove the baffle fixed the horn and the tweeter and turn it by 90° to either left-hand or right-hand direction to ensure wide directivity to the horizontal direction as well as the installation at the normal direction.

Remove the baffle with the following procedures.

1. Remove six screws fixed the front grill.
2. Remove 14 screws of the baffle as shown in the figure.
3. Turn the baffle by 90° after taking the baffle from the enclosure. (Generally the tweeter position should be placed downwards.)
4. Assemble the baffle with reverse procedures.

Specifications

Enclosure		Bass reflex type
Speaker	**Low frequency**	30cm (12") dia. cone speaker
	Mid frequency	CD horn (90° horizontal by 40° vertical) plus compression driver
	High frequency	Horn type
Nominal impedance		Low frequency: 8Ω Mid/High frequency: 16Ω
Sensitivity		Low frequency: 98dB(1W/1m) Mid/High frequency: 106dB(1W/1m)
Frequency response		60Hz~20kHz
Crossover frequencies		Low to Mid frequency (Frequency dividing network): 1kHz, –12dB/octave (Butterworth) Mid to High frequency (built-in passive network): 10kHz

High frequency level control		0~ –10dB (with an OFF position)
Power handling capacity	**Low frequency**	Continuous pink noise: 120W RMS (Band-limited 50Hz~1kHz) Continuous program : 360W
	Mid/High frequency	Continuous pink noise: 80W RMS (Band-limited 1k~20kHz) Continuous program : 240W
Input connector		4P screw terminal
Weight		39kg (86 lb)
Finish		Polyester in gray color

※ Specifications are subject to change without notice.

Accessories: Operating instructions .....1 Warranty card 1

Appearance

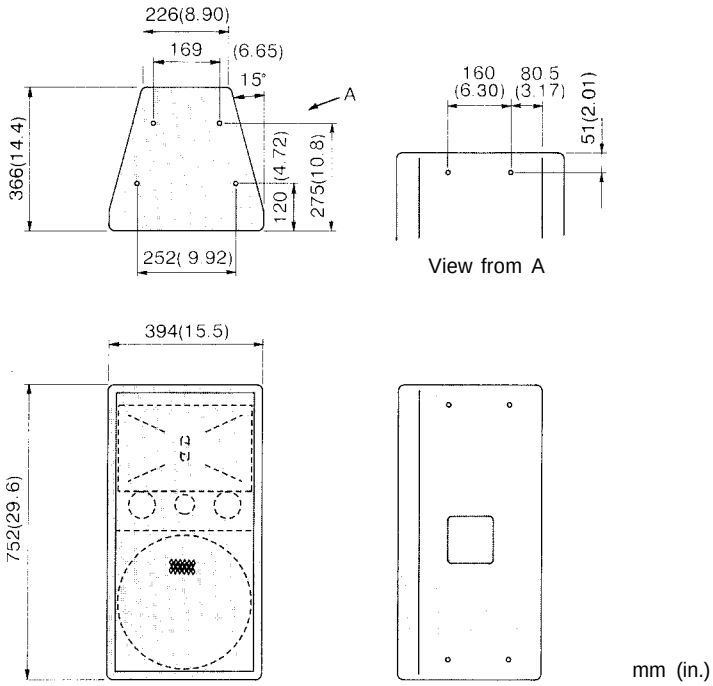

mm (in.)

Characteristic Diagrams (1/3 Octave Pink Noise)

Frequency Response (1W/1m)

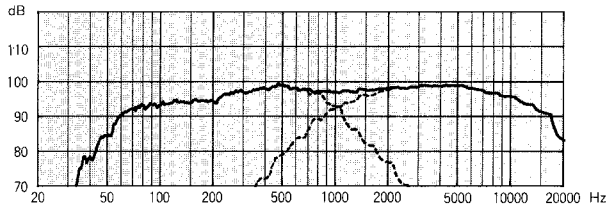

Frequency dividing network is set in status of the SF-60 single system.

Polar Response (1W/4m)

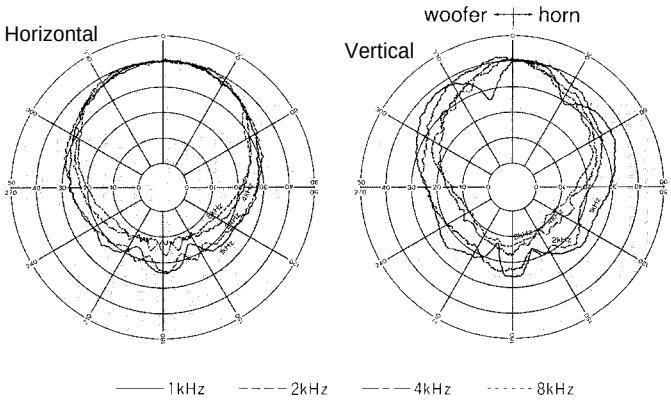

TOA Corporation
Printed in Japan
133-01-295-60